Russell Hobbs

A BRITISH ICON SINCE 1952

RHMT3201B-AU
32L DIGITAL MICROWAVE – BLACK

Operating Manual

russellhobbs.com.au
russellhobbs.co.nz

Contents

Safety Instructions	.....	3-11
Materials you can use in the microwave	.....	12
Materials to be avoided in the microwave oven	.....	13
Unpacking the microwave	.....	14
Product Overview	.....	15
Installation	.....	16-17
Control Panel & Features	.....	18
How to use the Microwave	.....	19-24
Care and Cleaning	.....	24
Disposal/Recycling	.....	24
Problem Solving	.....	25-28
Spare Parts	.....	28
Warranty	.....	29-30
Notes	.....	31

IMPORTANT SAFETY INSTRUCTIONS
READ CAREFULLY AND KEEP FOR FUTURE REFERENCE

General Safeguards

- To protect against electrical hazards do not immerse the power cord, plug, or microwave oven in water or any other liquid.
- This appliance is not intended for use by persons (including children) with reduced physical, sensory or mental capabilities, or lack of experience and knowledge, unless they have been given supervision or instruction concerning use of the appliance by a person responsible for their safety.
- Children shall be supervised to ensure they do not play with the appliance.
- Do not operate this appliance with a damaged cord/plug or after the appliance has malfunctioned or has been dropped or damaged in any manner.
- There are no user serviceable parts. If the power cord or appliance is damaged, it must be replaced/repaired by a qualified person in order to avoid a hazard.
- Utensils should be checked to ensure that they are suitable for use in microwave ovens. To check whether or not a utensil is suitable, please refer to the “Microwave Safe Containers/Utensils” section.
- Do not use corrosive chemicals or vapours in this appliance.
- Do not use this microwave for commercial purposes. This microwave oven is made for household use only.
- This microwave oven is specifically designed to heat or cook food. It is not designed for industrial or laboratory use.
- The microwave oven has several built-in safety switches to ensure that the power remains off when the door is open. Do not tamper with these switches.

- Do not use the microwave oven cavity for storage purposes. Do not store combustible items such as bread, cookies, paper products etc. inside the oven
- Do not use the microwave oven for the purpose of dehumidification. Do no dry clothes, newspapers or other materials in the microwave oven. They may catch on fire.
- Do not heat warming pads, slippers, sponges, damp cloth or similar materials as it may lead to risk of injury, ignition or fire.
- Do not store flammable materials next to, on top of, or in the microwave oven. It could be a fire hazard.
- Always turn off and unplug from the power outlet before cleaning the appliance.
- Failure to maintain the microwave oven in a clean condition could lead to deterioration that could adversely affect the life of the appliance and possibly result in a hazardous situation.
- When cleaning door and microwave oven surfaces, use only mild, non-abrasive soaps or detergents applied with a sponge or soft cloth. The heating of corrosive chemicals in this microwave oven may create microwave radiation leaks.
- To disconnect, set the switch on the wall power outlet to OFF, then grasp the plug and withdraw it from the wall socket. Never pull by the cord.
- Do not use appliance for other than its intended purpose as described in the Instruction Manual.
- Do not leave the microwave oven unattended when in use.

Location of Microwave Oven

- Install or locate this microwave oven only in accordance with the installation instructions provided.

- Do not use in the bathroom or near any source of water.
- Plug into a wall socket that is properly installed and grounded.
- Do not use on an inclined plane or unstable surface.
- Do not use the microwave oven near or below any curtains or other combustible materials.
- The microwave oven shall not be placed in a cabinet.
- Minimum height of free space necessary above the top surface of the microwave oven is 30cm.
- A minimum of 20cm is required between the microwave oven and any adjacent walls. One side must be open.
- The microwave oven must be placed on a countertop with a minimum height of 85cm.
- Do not move the microwave oven while it is switched on.
- Do not cover or block any vents on the microwave oven.
- Do not store or use this appliance outdoors.
- Keep cord away from heated surfaces.
- Do not cover the microwave oven when in use.
- Keep the microwave oven and the power cord away from the edge of table or countertops and out of reach of children and persons with reduced physical, sensory or mental capabilities.
- Do not place on or near any hot or damp surface.
- Do not install microwave oven over a range cook-top or other heat-producing appliance. If installed near or over a heat source, the microwave oven could be damaged.
- This appliance is not intended to be operated by means of an external timer or separate remote control system.

Food

- Do not overcook food.
- The turntable and turntable ring assembly must be in the oven during cooking in all cooking modes. Place the cookware gently on the turntable and handle it carefully to avoid possible breakage.
- Do not operate the microwave oven unless there is food or liquid content inside. Operating the oven with no food or food that is extremely low in moisture can cause fire, charring or sparking.
- Incorrect use of browning dish may cause the turntable to break.
- Do not cook food directly on the turntable. Excessive local heating of the turntable may cause the turntable to break.
- Do not use newspaper or paper bags for cooking.
- Do not cook food wrapped in paper towels, unless your cook book contains instructions for the food you are cooking.
- Remove wire twist ties and metal handles from paper or plastic containers / bags before placing them in the microwave oven.
- Do not attempt to deep fry in your microwave oven.
- Do not attempt home canning in this microwave oven, as it is impossible to be sure all contents of the jar have reached boiling temperature.
- Carefully attend the appliance when paper, plastic or other combustible materials are placed inside the microwave oven to facilitate cooking. When heating food in plastic or paper containers, check the microwave oven frequently due to the possibility of ignition.
- Eggs in their shell and whole hard-boiled eggs should not be heated in microwave ovens since they may explode, even after microwave heating has ended.
- Potatoes, apples, egg yolks, chicken wings, whole squash and sausages are examples of foods with non-porous skins. This type of food must be pierced before cooking to prevent bursting.

- SCALDING HAZARD! Liquids, such as water, coffee or tea are able to be overheated beyond the boiling point without appearing to be boiling. Visible bubbling or boiling when the container is removed from the microwave oven is not always present. This could result in very hot liquids suddenly erupting when the container is disturbed or a spoon or other utensil is inserted into the liquid. Care must be taken when handling the container.
- Stir liquids both before and halfway through heating for best results.
- After heating, allow the container to stand in the microwave oven for a short time.
- Use extreme care when inserting a spoon or other utensil into the container.
- Liquids or other food must not be heated in narrow necked or sealed containers since they are liable to explode.
- If smoke is observed, switch off and unplug the appliance and keep the door closed in order to stifle any flames.
- The contents of feeding bottles and baby food jars are to be stirred or shaken and the temperature is to be checked before consumption, in order to avoid burns.
- Always monitor when food is heated or cooked in disposable containers of plastic, paper or other combustible materials due to the possibility of ignition or of the food container deteriorating.
- Always take care when removing food items as it is hot.
- Do not attempt to cook items that are too large for the microwave oven.
- If the supply cord is damaged, it must be replaced by the manufacturer, its service agent or similarly qualified persons in order to avoid a hazard.
- WARNING: If the door or door seals are damaged, the oven must not be operated until it has been repaired by a competent person.

- WARNING:It is hazardous for anyone other than a competent person to carry out any service or repair operation that involves the removal of a cover which gives protection against exposure to microwave energy.
- WARNING:Liquids or other foods must not be heated in sealed containers since they are liable to explode.
- Only use utensils that are suitable for use in microwave ovens.
- Metallic containers for food and beverages are not allowed during microwave cooking.
- When heating food in plastic or paper containers, keep an eye on the oven due to the possibility of ignition.
- The microwave oven is intended for heating food and beverages. Drying of food or clothing and heating of warming pads, slippers, sponges, damp cloth and similar may lead to risk of injury, ignition or fire.
- Microwave heating of beverages can result in delayed eruptive boiling, therefore care must be taken when handling the container.
- The oven should be cleaned regularly and any food deposits removed.
- The appliance shall not be cleaned with a steam cleaner.
- WARNING: Ensure that the cavity does not contain any items or utensils that are not suitable for the use with the microwave oven before you operate the appliance.
- WARNING: Do not use the cavity for storing combustible products, cooking utensils, or food and similar when the microwave oven is not in use.

SAVE THESE INSTRUCTIONS
THIS APPLIANCE IS INTENDED TO BE USED IN HOUSEHOLD AND SIMILAR APPLICATIONS SUCH AS:
- Staff kitchen areas in shops, offices and other working environments;
- farm houses;
- by clients in hotels, motels and other residential environments;
- bed and breakfast type environments.
Only use accessories supplied with the microwave oven

IMPORTANT SAFETY INSTRUCTIONS

READ CAREFULLY AND KEEP FOR FUTURE REFERENCE

PRECAUTIONS TO AVOID POSSIBLE EXPOSURE TO EXCESSIVE MICROWAVE ENERGY

- Do not attempt to operate this microwave oven with the door open as this can result in harmful exposure to microwave energy. The door is fitted with safety interlock switches that prevent the microwave oven from operating with the door open.

DO NOT tamper with or attempt to override the safety interlocks.

- Do not place any object between the microwave oven front face and the door, or allow food or cleaner residues to accumulate on sealing surfaces.

WARNING

- **Do not operate the microwave oven if it is damaged in any way.**
- **It is particularly important that the microwave oven door closes properly and that there is no damage to the:**
    - **DOOR (bent)**
    - **HINGES AND LATCHES (broken or loosened)**
    - **DOOR SEALS AND SEALING SURFACE**
        - **The microwave oven should not be adjusted or repaired by anyone except properly qualified service personnel.**
        - **Liquids and other foods must not be heated in sealed containers as they are liable to explode.**

IF MATERIALS INSIDE THE MICROWAVE OVEN IGNITE:

- Keep the microwave oven door closed to contain and stifle any flames.
- Turn the microwave oven off and remove the plug from the wall power outlet.

Please ensure cooking times are correctly set as overcooking may result in the FOOD catching fire and subsequent damage to your microwave oven.

Read these instructions before using your microwave oven. Keep this booklet in a safe place for future reference. When using electrical appliances, basic safety precautions should always be followed. For additional safety information, please refer to the “Important Safeguards” section.

GENERAL USE

MICROWAVE SAFE CONTAINERS / UTENSILS

- The glass plate, turntable ring assembly and turntable shaft must remain installed for use for all cooking modes.
- Tightly-closed containers can explode. Closed containers must be opened and plastic pouches must be pierced before cooking.
- To test a container / utensil for safe microwave oven use:
- Add 1 cup of cool water to a heat resistant glass jug and place it in the microwave oven alongside the empty container/utensil to be tested; heat for one (1) minute at maximum power.
- If the container/utensil you are testing is microwave oven safe (transparent to microwave energy) it should remain comfortably cool, the water in the glass jug should be hot. If the container/utensil being tested is hot, it has absorbed some microwave energy and should NOT be used.
- This test is not applicable for plastic items. Check the markings on plastic items to ensure they are microwave safe.

CAUTION: Personal Injury Hazard. Use an oven mitt or tea towel when handling containers and utensils that have been heated in the microwave.

Cookware	Microwave
Glass plate, Turntable ring assembly and Turntable shaft (provided)	Yes
Heat–Resistant Glass	Yes
Non Heat–Resistant Glass	No
Heat–Resistant Ceramics	Yes
Microwave–Safe Plastic Dish	Yes
Kitchen Paper/Paper towel	Yes
Metal Tray/Tin	No
Metal Rack	No
Aluminium Foil & Foil Container	No

**** CAUTION: Microwaving with the metal rack, tray, foil, etc. may cause arcing / sparks.**

CAUTION HOT SURFACE

Caution: This symbol and symbol and text is placed on surfaces that can get hot during use and stay hot after use.

MATERIALS YOU CAN USE IN THIS MICROWAVE OVEN

NOTE: Always try to use items labelled as microwave safe to minimise any uncertainty.

Browning dish
Follow browning dish manufacturer's instructions.
NOTE: An overly hot browning dish sitting directly on the glass turntable could cause the turntable to break!

Dinnerware
Microwave-safe only. Follow manufacturer's instructions. Do not use cracked or chipped dishes.

Glassware
Heat-resistant oven glassware only. Make sure there is no metallic trim. Do not use cracked or chipped dishes. Confirm glassware is heat-resistant before using in the microwave oven.

Oven cooking bags
Follow manufacturer's instructions. Do not close with metal tie. Make slits to allow steam to escape.

Paper plates and cups
Use for short–term cooking/warming only. Do not leave microwave oven unattended while cooking. Do not place waxed or recycled paper items in the microwave.

Paper towels
Use to cover food for reheating and absorbing fat. For short-term cooking only. Do not leave unattended while cooking.

Parchment paper
Use as a cover to prevent splattering or a wrap for steaming.

Plastic
Microwave-safe only. Follow the manufacturer's instructions. Should be labelled "Microwave Safe". Some plastic containers soften as the food inside gets hot. "Boiling bags" and tightly closed plastic bags should be slit, pierced or vented as directed by package.

Plastic wrap
Microwave-safe only. Use to cover food during cooking to retain moisture.

Thermometers
Microwave-safe only (meat and candy thermometers).

MATERIALS TO BE AVOIDED IN MICROWAVE OVEN

Aluminium tray
May cause arcing. Transfer food into microwave-safe dish.

Food carton with metal handle
May cause arcing. Transfer food into microwave-safe dish.

Metal or metal trimmed utensils
Metal shields the food from microwave energy. Metal trim may cause arcing.

Metal twist ties
May cause arcing and could cause a fire in the microwave oven.

Paper bags
May cause a fire in the microwave oven.

Recycled paper products
Unless the paper product is labelled as microwave safe. Recycled paper products may contain impurities which may result in sparks and/or fires when used.

Plastic foam
Plastic foam may melt or contaminate the liquid inside when exposed to high temperatures.

Wood
Wood will dry out when used in the microwave oven and may split or crack.

Ceramic
Do not use ceramic containers which have metallic inlays.

UNPACKING THE MICROWAVE

NAMES OF MICROWAVE OVEN PARTS AND ACCESSORIES

Remove the microwave oven and all materials from the carton and oven cavity.

BEFORE YOU USE YOUR MICROWAVE OVEN

1. Remove all the packaging. Do not remove the large piece of cardboard from the right hand side of the cavity wall (Refer to the below image). This is called a waveguide cover and allows the microwaves to pass through to cook the food.

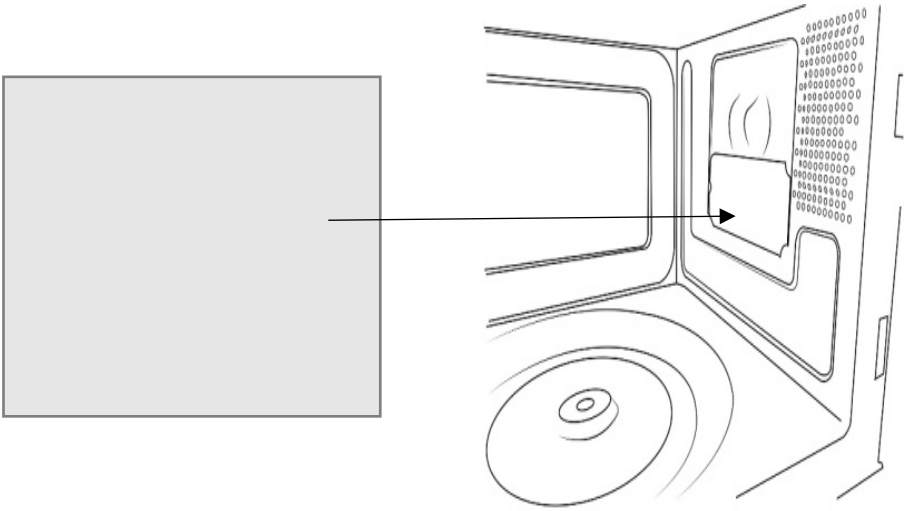

Please ensure you keep this cover clean at all times by wiping with a damp cloth Do not remove/place in a dishwasher.

2. Check the oven after unpacking for any visual damage such as

- A misaligned door
- Damage to the door
- Dents or holes in the door window and screen
- Dents on the inside

This microwave oven weighs approximately 17 kg so you must put it on a horizontal surface that is strong enough to support this weight. The oven must be placed away from high temperatures and steam. Do not put anything on the top of the microwave oven.

PRODUCT OVERVIEW

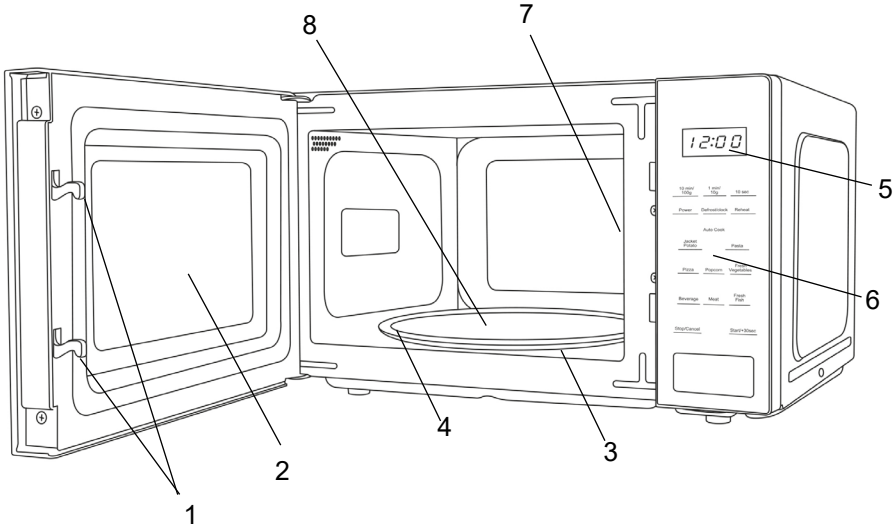

1.	Safety interlock latches	5.	Screen display
2.	Door assembly and window	6.	Control panel
3.	Roller ring	7.	Wave guide cover (do not remove)
4.	Coupling	8.	Glass Turntable

INSTALLATION

Remove all packing material and accessories. Examine the microwave oven for any damage such as dents or a broken door. Do not install if microwave oven is damaged in any way.

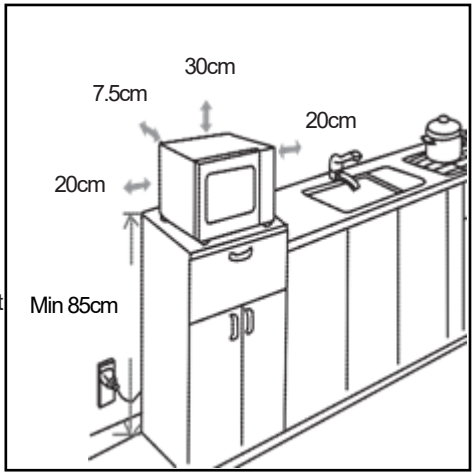

Cabinet: Remove any protective film found on the microwave oven cabinet and control panel surfaces. Do not remove the light brown Mica cover that is attached to the inside of the microwave oven cavity. This is required to protect the magnetron.

- Place the oven as far away from radios and televisions as possible. Using the oven may cause interference with the reception.
- Plug the oven into a suitable mains socket, make sure the voltage is the same as on the rating label (do not use extension cables or mains socket adaptors.)
- The microwave oven should be used free standing only and must not be built-in or used in a cabinet.

1. Select a level surface that provides enough open space for the intake and/or outlet vents.
2. The minimum installation height is 85cm.
3. The rear surface of the appliance should be placed against a wall. A minimum clearance of 7.5cm is required behind the microwave oven.
4. A minimum clearance of 30cm is required above the microwave oven.
5. A minimum clearance of 20cm is required between the microwave oven and any adjacent walls.
6. Do not remove the legs from the bottom of the microwave oven.
7. Blocking the intake and/or outlet vents can damage the microwave oven.

WARNING: Do not install the microwave oven over a range cook top or other heat-producing appliance. If installed near or over a heat source, the microwave oven could be damaged and the warranty would be void. The microwave oven is designed for bench-top use only and must not be placed in a cabinet.

TURNTABLE INSTALLATION

Before first use, check that any securing tape and all packaging has been removed from the glass tray and turntable ring assembly.

a. Never place the glass turntable upside down. The glass turntable movement should never be restricted.
b. Both glass turntable and turntable ring assembly must always be used during cooking.
c. All food and containers of food are always placed on the glass turntable for cooking.
d. Do not use the microwave if the glass turntable or turntable ring assembly cracks or breaks. Contact Customer Service.
e. Do not place the food directly onto the glass tray, always place on or in suitable microwaveable cookware.
f. Please check that crockery is microwave safe before using.

To assemble the turntable, follow the steps below in number order.

STEP 1 The turntable coupling should slot into the centre of microwave

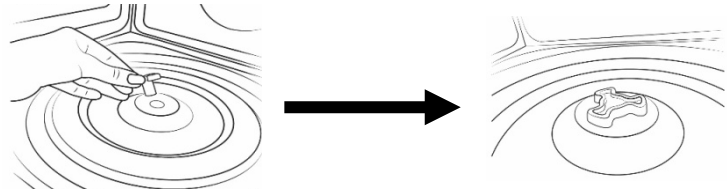

STEP 2 The turntable ring slots into the indents in the microwave base.

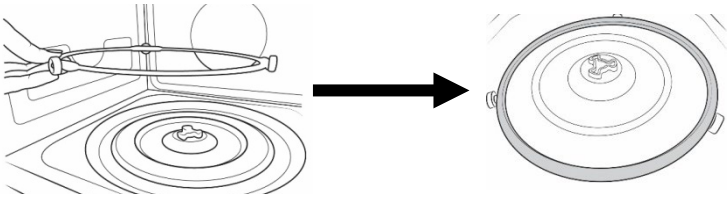

STEP 3 The glass tray should align with the turntable coupling.

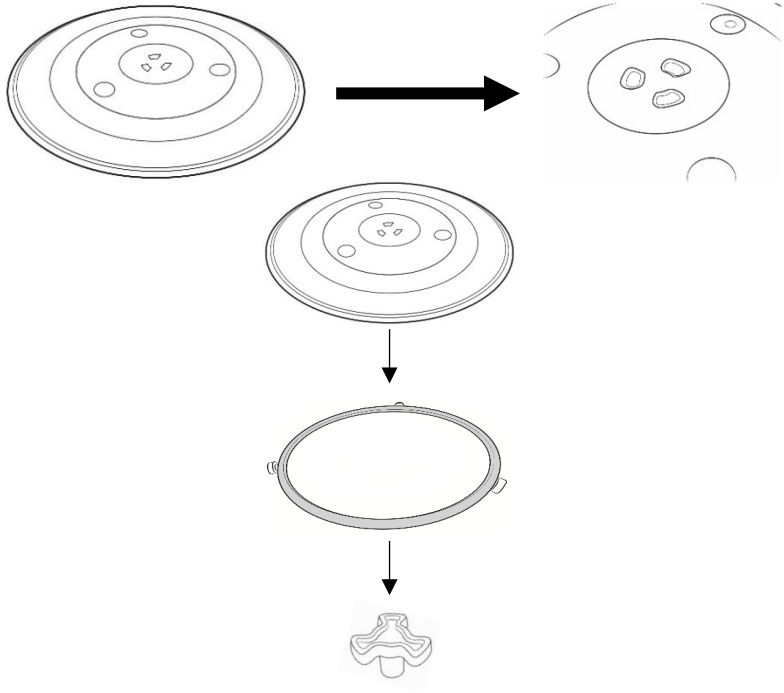

CONTROL PANEL & FEATURES

SCREEN DISPLAY
Cooking time, power, indicators and clock time are displayed.

NUMBER AND WEIGHT PADS
Press to set the time or food weight.

POWER
Press to select the desired microwave power.

DEFROST/CLOCK
Press and then input weight or time for defrosting or hold down this button to set the clock.

REHEAT
Press and then input the weight for reheating the food.

AUTO MENU PADS
Press to select the kind of food you want to cook from the 8 auto menus.

STOP/CANCEL
Press to stop/cancel the cooking process.

START/+30.SEC
Press to start a cooking program and simply press it a number of times to set a quick start cooking time.

OPENING BUTTON
Press to open the door of the appliance.

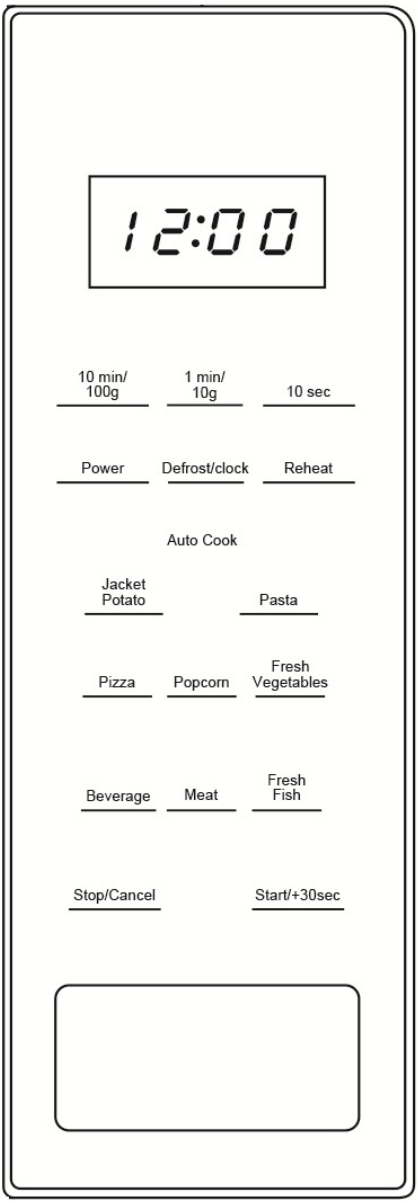

HOW TO USE THE MICROWAVE

Turn on the power

Insert the main plug into a suitable mains socket.

Note: Make sure the voltage is the same as on the rating label located on the back of the microwave (do not use extension cables or mains socket adaptors.)

The microwave oven will flash and beep once.

Setting the Clock

This microwave only displays time in 24 hour format. To set the time:

1. Press and hold down the '**Defrost/clock'** button for more than 3 seconds. The hour position will flash.
2. Press the '**10min/100g**' button to set the first hour digit i.e. 0, 1, or 2, and then press the '**1min/10g**' button to set the second hour digit i.e. 0 to 9.
3. Then press the '**Defrost/clock**' button to switch to the minute setting; the minute position will now flash.
4. Press the '**10min/100g**' button to set the first minute digit i.e. 0 to 5, and then press the '1min/10g' button to set the second minute digit, i.e. 0 to 9.
5. Press the '**Defrost/clock**' button to confirm the specified time and exit the clock setting mode.

Note:

Before setting a cooking program the clock needs to be set. If the clock is not set, the clock will not function when powered. During the process of clock setting, if you press the 'Stop/Cancel' button, the oven will go back to its resting state.

Microwave cooking

Once you have correctly installed the microwave, turned on the power and set the clock, you are ready to start cooking.

Your microwave has 10 power levels, the lowest at 10%, then 20%, 30%, 40%, 50%, 60%, 70% 80%, 90%, up to 100% full power.

Most recipes are cooked on full power which is usually indicated on the packaging of the microwavable food.

1. To select a power level, press the POWER button.
   - Press once the screen display will show '100P' (100% power)
   - Press twice the screen display will show '90P' (90% power)
   - Press three times the screen display will show '80P' (80% power)

- Pressed four times the screen display will show ‘70P’ (70% power)
- Pressed five times the screen display will show ‘60P’ (60% power)
- Press six the screen display will show ‘50P’ (50% power)
- Press seven times the screen display will show ‘40P’ (40% power)
- Pressed eight times the screen display will show ‘30P’ (30% power)
- Pressed night times the screen display will show ‘20P’ (20% power)
- Pressed ten times the screen display will show ‘10P’ (10% power)

2. Once you have selected your microwave power, press the ‘10min/100g’, ‘1min/10g’ and ‘10sec’ buttons to select the required time.
3. Press the START/+30 Sec. button to commence cooking.
4. Once cooking is complete, the display will show ‘End’ and 3 beeps will sound. These will repeat every few minutes until the microwave door is opened or the ‘Stop/Cancel’ button is pressed.

Please note: The maximum time that can be entered is 1 hour (60:00). Do not operate the microwave empty, this can cause irreparable damage. At the maximum microwave power, the oven will automatically lower the power after a certain length of cooking time in order to lengthen the service life of the appliance.

Please note: During the process of setting the cooking programme, if you press the ‘Stop/Cancel’ button, the oven will go back to its resting state.

Pausing cooking

If you want to pause the cooking to turn over or stir contents, simply open the door, then close again and press the START/+30 Sec. button to continue the cycle.

Quick start function

For quick and easy microwave cooking, you can press the ‘Start/+30 Sec.' button to automatically add 30 seconds of cooking time. This can be pressed multiple times for cooking up to 60 minutes on full power.

Note: This function does not work for defrost or auto menu.

Alternatively, you can press the 10min/100g’, ‘1min/10g’ and ‘10sec’ buttons to select the required time. You can then press the START/ +30 Sec. button to commence cooking at full microwave power.

Defrost

The microwave generally penetrates 4cm into most foods. Therefore you must ensure food is thoroughly defrosted before starting the cooking process.

For even defrosting results, ensure you turn the food over during the cycle.

Defrosting generally takes longer than the cooking time of food.

Defrosted food should be consumed as soon as possible; do not put it back in the fridge or freeze again.

This microwave has two defrost modes:

- dEF1 – For defrosting food by weight, with a weight range of 100g to 1500g.
- dEF2 – For defrosting food by time, with a maximum time of 60 minutes.

As an example, to defrost 450g of poultry:

1. Press the 'Defrost' button and 'dEF1' will be displayed.
2. Press the '10min/100g' button 4 times and the '1min/10g' button 5 times The display will show '450g'.
3. To commence defrosting, press the 'Start/+30 Sec.' button.

As an example, to defrost food for 25 minutes and 30 seconds:

1. Press the '**Defrost**' button twice and '**dEF2**' will be displayed.
2. Press the '**10min/100g**' button 2 times, the '**1min/10g**' button 5 times and the '**10sec**' button 3 times. The display will show '**25:30**'.
3. To commence defrosting, press the 'Start/+30 Sec.' button.

On '**dEF1**' programmes approximately half of the way through the defrosting time, the microwave will beep. This is to allow you to turn over the food for even defrosting. Turn over or rearrange the food and press the '**Start/+30 Sec**.' button to resume defrosting. To defrost fatty meat, defrost intermittently until defrosted. Ice should be removed at all times.

Once defrosting is complete, the display will show 'End' and 3 beeps will sound. These will repeat every few minutes until the microwave door is opened or the '**Stop/Cancel**' button is pressed.

Please note: During the process of setting the cooking programme, if you press the '**Stop/Cancel**' button, the oven will go back to its resting state.

Please note: Ensure food is thoroughly defrosted before starting the cooking process

Reheat

1. The reheat function is there to help you reheat food according to its weight.
   Press the '**Reheat'** button once and **'200g'** will be displayed.
   Press the '**Reheat**' button twice and '**400g**' will be displayed.
   Press the '**Reheat**' button three times and '**600g**' will be displayed.
   Press the '**Reheat**' button four times and **'800g**' will be displayed.
   Press the '**Reheat'** button five times and **'1000g'** will be displayed.

2. Once the correct weight is displayed, press the '**Start/+30 Sec**.' button to start.
3. Once cooking is complete, the display will show 'End' and 3 beeps will sound. These will repeat every few minutes until the microwave door is opened or the **'Stop/Cancel'** button is pressed.

Child lock

The lock prevents unsupervised operation by children.

To set: In standby mode, press and hold the **'Stop/Cancel'** button for 3 seconds. A beep will sound, the oven will auto enter child lock mode, and the lock indicator light will turn on. In the locked state, all buttons are disabled except for the **'Stop/Cancel'** button.

To cancel: Press and hold the **'Stop/Cancel'** button for 3 seconds. A beep will sound and the lock indicator light will turn off.

Auto cook menu

There are 8 auto menus you can use for easy cooking. They automatically calculate the cooking time based on the type of food and its weight. For guidelines, please see the Auto menu table on the following page.

1. Place the food in a container suitable for use with microwave ovens and put it into the oven.
2. Press the type of food you want to cook. The weight options will display.
3. Keep pressing the button until you reach the required weight.
4. Press the **'Start/+30 Sec.'** button. The microwave will now start to cook the food.

Please note: It is advisable to stir and turn food where needed to ensure even cooking. Be sure to handle hot food with care.

Please note: During the process of setting the cooking programme, if you press the **'Stop/Cancel'** button, the oven will go back to its resting state.

Auto cooking function

You will need to use your discretion regarding food type, temperature and weight as times may vary – the table on the below is a guideline for each auto cooking setting:

Display	Food Type	Method
A.1	Potato	The optional weights are 250g, 500g and 750g.
A.2	Pasta	The optional weights are 50g, 100g and 150g.
A.3	Pizza	The optional weights are 200g and 400g.
A.4	Popcorn	The optional weight is 100g.
A.5	Vegetables	The optional weights are 200g, 400g and 600g.
A.6	Beverage	The optional weights are 1 cup, 2 cups or 3 cups, each one about 250ml.
A.7	Meat	The optional weights are 200g, 400g and 600g.
A.8	Fish	The optional weights are 200g, 400g and 600g.

COOKING TIME
If you are unsure of cooking times it is advisable to start with a short cooking time and monitor cooking progress before adding further time. Overcooking could lead to a risk of fire. Ensure food is cooked thoroughly before consuming.

COOKING FOOD EVENLY
Foods such as meat should be turned frequently to ensure more even cooking results. If the food is liquid based, stirring during the cooking time is advisable.

ALLOW STANDING TIME
When the microwave has stopped cooking, leave the food to rest for an adequate length of time to allow for cooking completion and cooling.

CARE & CLEANING
Switch off at the wall power outlet and remove the plug from the socket before cleaning and when not in use.

- If food spills or splatters in the microwave, wipe over all the interior surfaces with a sponge or soft damp cloth. Try to clean spills and splatters straight away. If ingredients have built up and stuck to the walls a mild detergent can be used.
- Wipe the exterior with a damp cloth and dry thoroughly. Do not let water enter the ventilation openings.
- On the right hand side wall of the cavity is the waveguide cover, microwaves are passed through this to enable your food to cook. It is important that this waveguide cover is kept clean at all times. To do this wipe with mild detergent and water, then dry.
- Do not use harsh or abrasive cleaners.
- Do not allow the control panel to become wet. Clean with a soft damp cloth. Do not use detergents, abrasives or spray-on cleaners on the control panel.
- Carefully wash the glass turntable and turntable ring in warm soapy water. Rinse with clean water and dry thoroughly before placing back into the microwave. Ensure these parts are correctly in place before use.
- Wipe the bottom of the microwave oven interior with a soft damp cloth to ensure smooth operation of the turntable ring.
- To remove odours from the microwave; in a deep microwave safe bowl combine 1 cup of water with the juice of 1 lemon (or 1 tbsp of white vinegar) and microwave for 5 minutes at 100% power. Carefully remove the bowl and wipe the interior of the microwave with a dry soft cloth.
- Do not immerse the microwave oven in water or any other liquid.
- If steam builds up inside or around the outside of the oven door, wipe with a soft cloth. This may happen when the microwave oven is used in humid conditions.
- Failure to maintain the oven in a clean condition, especially if liquid is left under the turntable, could lead to deterioration of the surface that will adversely affect the life of the appliance that may result in a hazardous condition.

DISPOSAL/RECYCLING
Legislation in some localities mandates that e-waste (anything with a plug, battery or cord) is disposed of through controlled recycling facilities and must not be disposed of in general household waste. For more information about recycling of electrical and battery operated appliances, please contact your local council or your local household waste disposal service.

PROBLEM SOLVING

WARNING: To reduce the risk of personal injury, always unplug the microwave before performing maintenance or trouble shooting checks.

The microwave oven may cause interference to your radio, TV or similar equipment. If this happens, you can stop the interference by moving the radio, TV or equipment as far away from your microwave oven as possible.

Problem	Potential reason	Potential solution
If the microwave doesn't work	1. Microwave is not plugged in	Make sure the plug is fitted securely into the wall outlet and the outlet is switched on. If it is not, remove the plug from the outlet, wait 10 seconds and plug it in again securely.
	2. Wall outlet is not working	The wall outlet that the microwave is plugged into may have become faulty. Plug the microwave into another known good outlet and ensure the outlet is turned on. Check if the microwave now works.
	3. Microwave has developed a fault	Contact customer services to talk through the problem to see if any solution for the fault can be found. If not and the product is within its warranty period, then the microwave should be returned to the retailer it was purchased from for a replacement or refund.
If the microwave turns on but does not operate	1. Door is not closed	Make sure the door is securely closed.
	2. The power has not been set/the timer has not been set.	Set the microwave power by pressing the 'Power' button. Select the required cooking time by pressing the 10Min/100g, 1Min/10g, or 10 sec buttons and pressing **START** to confirm.
If the microwave isn't heating	Magnetron not working	The component that produces the microwaves is called a magnetron, if food is not being heated or is 'luke' warm then it is likely this component has developed a fault. If the microwave is within its warranty period, please contact customer services for further advice or take the microwave back to the retailer it was purchased from for a refund or replacement.

Problem	Potential reason	Potential solution
Sparking	1. Burnt on food debris	Burnt on food debris in the microwave, on the waveguide and behind the waveguide can cause the microwave to ‘spark’. This is because burnt on debris can be focused on by the microwaves and spark.
	2. Metal or foil	No metal or foil should be put inside a microwave as it can cause ‘sparking’ which can damage the microwave.
	3. Pressure build up in food	Food with none porous skins (potatoes for example), must be pierced to allow steam to escape. As the build up of pressure can cause food to burst and create a ‘fire hazard‘.
Heat spots	Operated empty or with no moisture	Microwaves cannot be run empty, microwaves need moisture to operate correctly. If microwaves are operated empty or are used to heat up plates (this is not permitted), the microwaves can focus on a single point inside the microwave. This can cause a heat spot, which can cause the area to become deformed, warped or start to melt. If microwaves are operated empty or to heat up foreign objects this will void the warranty.

Problem	Potential reason	Potential solution
Condensation or excess water	1. Food that is being cooked	Small amounts of condensation can be expected when using the microwave. As the food/beverage inside the microwave is heated it will produce steam, some of which will form condensation inside the microwave cavity.
	2. Cooling vents covered	Cooling vents allow the heat and steam to escape from the microwave. These cannot be covered as it can cause excessive water to settle inside the microwave or the microwave to overheat. The installation instructions in the instruction manual must be followed or the warranty will be void.
Light not working	Bulb not working	Due to the construction of microwaves and certain ‘dangerous’ components, the light bulb can only be changed by a qualified service engineer.
Over heating	Cooling vents covered	Cooling vents allow the heat and steam to escape from the microwave. These cannot be covered as it can cause excessive water to settle inside the microwave or the microwave to overheat. The installation instructions in the manual must be followed or the warranty will be void.

Problem	Potential reason	Potential solution
Too noisy	1. Glass turntable fitted incorrectly	Check that the glass turntable has been placed correctly on the turntable and is not hitting the walls/doors of the microwave during operation.
	2. Dishes/plates are too large for the microwave	Check that the dishes/plates are the correct size for the microwave and that they are not hitting the walls/door of microwave during operation.
Door not shutting/ locking	1. Glass turntable fitted incorrectly	Check that the glass turntable has been placed correctly on the turntable and is not stopping the door from shutting correctly.
Turntable not rotating	1. Turntable coupling not fitted or tape not removed	Check that the turntable coupling is fitted correctly and the transportation tape has been removed.
	2. Turntable roller ring not fitted or fitted incorrectly	Check that the turntable roller has been placed under the turntable and that it is positioned correctly.
	3. Glass turntable fitted incorrectly	Check that the glass turntable has been placed correctly on the roller ring and is properly engaged with the coupling.

SPARE PARTS

Turntable coupling

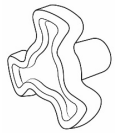

Turntable ring

Glass turntable

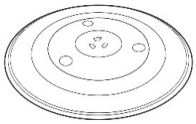

Spectrum Brands Australia Pty Ltd
Locked Bag 3004 Braeside
Victoria 3195 Australia

Customer Service in Australia
Toll Free: 1800 623 118
Email: consumer.enquiry@russellhobbs.com.au
Website: www.spectrumbrands.com.au

Spectrum Brands New Zealand Ltd
PO Box 9817 Newmarket
Auckland 1149 New Zealand

Customer Service in New Zealand
Toll Free: 0800 736 776
Email: info@russellhobbs.co.nz
Website: www.spectrumbrands.co.nz

Spectrum Brands Australia Pty Ltd and Spectrum Brands New Zealand Ltd Warranty Against Defects

In this warranty:

Australian Consumer Law means the Australian consumer law set out in Schedule 2 to the Competition and Consumer Act 2010;
CGA means the New Zealand Consumer Guarantees Act 1993;
Goods means the product or equipment which was accompanied by this warranty and purchased in Australia or New Zealand, as the case may be;

Manufacturer, **We** or **us** means:
1. for Goods purchased in Australia, Spectrum Brands Australia Pty Ltd ABN, 78 007 070 573; or
2. for Goods purchased in New Zealand, Spectrum Brands New Zealand Ltd, as the case may be, contact details as set out at the end of this warranty;

Supplier means the authorized distributor or retailer of the Goods that sold you the Goods in Australia or in New Zealand; and
You means you, the original end-user purchaser of the Goods.
1. Our goods come with guarantees that cannot be excluded under the Australian Consumer Law, or the CGA. You are entitled to a replacement or refund for a major failure and compensation for any other reasonably foreseeable loss or damage. You are also entitled to have the goods repaired or replaced if the goods fail to be of acceptable quality and the failure does not amount to a major failure.
2. The benefits provided by this Warranty are in addition to all other rights and remedies in respect of the Goods which the consumer has under either the Australian Consumer Law or the CGA. The original purchaser of the Goods is provided with the following Warranty subject to the Warranty Conditions:
3. We warrant the Goods for all parts defective in workmanship or materials for a period of 1 year from the date of purchase (Warranty Period).

If the Goods prove defective within the Warranty Period by reason of improper workmanship or material, we may, at our own discretion, repair or replace the Goods without charge.

Warranty Conditions

1. The Goods must be used in accordance with the manufacturer's instructions. This Warranty does not apply should the defect in or failure of the Goods be attributable to misuse, abuse, accident or non-observance of manufacturer's instructions on the part of the user. As far as the law permits, the manufacturer does not accept liability for any direct or consequential loss, damage or other expense caused by or arising out of any failure to use the Goods in accordance with the manufacturer's instructions.

2. Exhaustible components (such as batteries, filters and brushes) of the Goods are included under this Warranty only where there is a defect in workmanship or materials used.

3. The warranty granted under clause 3 is limited to repair or replacement only.

4. Any parts of the Goods replaced during repairs or any product replaced remain the property of the manufacturer. In the event of the Goods being replaced during the Warranty Period, the warranty on the replacement Goods will expire on the same date as for the Warranty Period on the original Goods which are replaced.

5. In order to claim under the warranty granted under clause 3 you must:

    a) Retain this warranty with your receipt/proof of purchase; and

    b) Return the Goods to us at the relevant address or to the Supplier by prepaid freight within the Warranty Period accompanied with (i) the legible and unmodified original proof of purchase, which clearly indicates the name and address of the Supplier, the date and place of purchase, the product name or other product serial number and (ii) this warranty.

6. This warranty is immediately void if:

    a) Any serial number or appliance plate is removed or defaced;

    b) The Goods have been serviced or otherwise repaired by a person not authorised to do so by us or where non approved replaced parts are used.

7. The Goods are designed for domestic use only. The Goods must be connected to the electrical voltage requirements as specified in the ratings label located on the Goods.

8. This warranty does not cover the cost of claiming under the warranty or transport of the Goods to and from the Supplier or us.

9. This warranty is only valid and enforceable in Australia against Spectrum Brands Australia Pty Ltd and in New Zealand against Spectrum Brands New Zealand Ltd.

Contact us or the Supplier for further details.

REGISTER YOUR PRODUCT ONLINE

Registration of your product is for marketing purposes only, not warranty registration.

If you live in Australia, please visit: https://au.russellhobbs.com/product-registration

If you live in New Zealand, please visit: https://www.russellhobbs.co.nz/product-registration

Registration entitles you to receive these benefits: Product information; Hints and tips; Recipes and news; Information on special price offers and promotions.

Please retain your receipt as proof of purchase for any warranty claims.

Any questions? Please contact Customer Service for advice.

Notes

Model number	RHMT3201B-AU
Rated voltage	230-240V~, 50Hz
Rated power input	1520-1600W
Rated power output	950-1000W

Revision 1.2